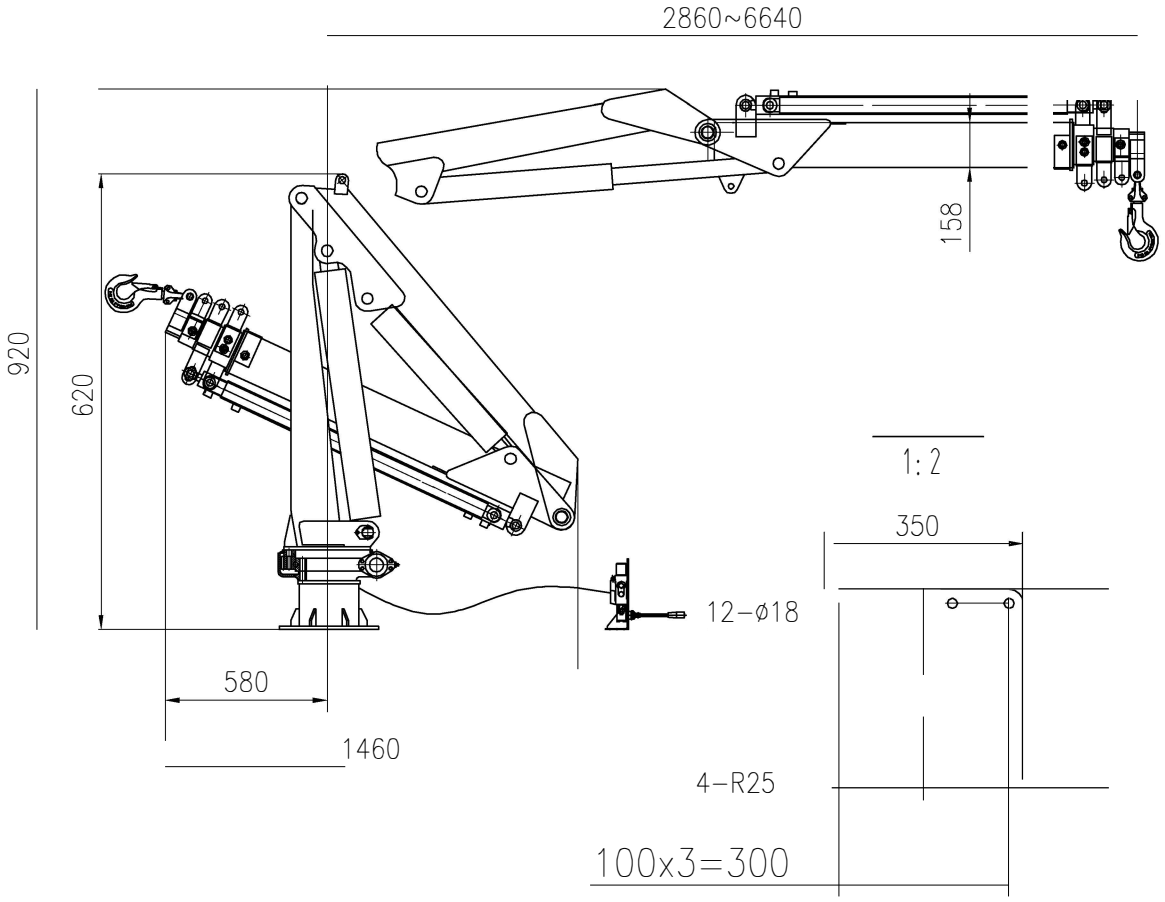
2860~6640
920
620
158
1:2
350
12-Ø18
580
1460
4-R25
100x3=300

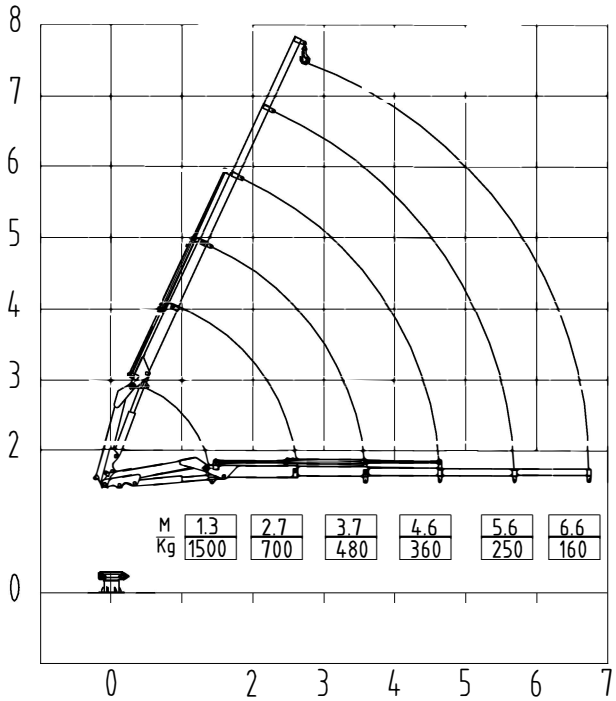
8
7
6
5
4
3
2
0
M 1.3 2.7 3.7 4.6 5.6 6.6
Kg 1500 700 480 360 250 160
0 2 3 4 5 6 7